EUROTUBI

Via Croce Rossa Italiana, 12
20834 Nova Milanese (MB) Italy
Tel. 0362 365068 Fax 0362 41099
www.eurotubieuropa.it - info@eurotubieuropa.it

STANDARD BENDS

Butt welding hydraulic bends. Material: seamless steel tube E235 according to UNI EN 10305-4

CATALOGUE 2018

SYMMETRICAL



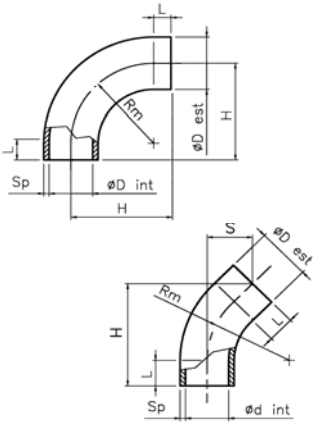

DIAMETER & THICKNESS			90° BENDS					45° BENDS					
D Ext	D Int	Sp	QUOTE R	QUOTE L	QUOTE H	Part no.	Pcs per box*	QUOTE R	QUOTE L	QUOTE H	QUOTE S	Part no.	Pcs per box*
6	4	1	9	8	17	S060490	1.000	11	5	16	7	S060445	1.000
8	5	1,5	13	5	18	S080590	1.000	12	8	22	9	S080545	1.000
10	7	1,5	13	5	18	S100790	1.000	13	6	19	8	S100745	1.000
12	9	1,5	16	6	22	S120990	500	17	8	25	11	S120945	500
14	10	2	18	7	25	S141090	500	18	7	25	10	S141045	1.000
16	12	2	25	8	33	S161290	500	22	7	27	11	S161245	1.000
17	13	2	25	8	33	S171390	500	25	8	31	13	S171345	800
20	16	2	30	8	38	S201690	400	30	8	35	14	S201645	500
	15	2,5	30	8	38	S201590	300	30	8	35	14	S201545	500
25	20	2,5	38	8	46	S252090	200	38	12	47	20	S252045	300
26	20	3	39	8	47	S262090	150	40	8	42	17	S262045	300
32	26	3	42	8	50	S322690	120	42	9	45	19	S322645	200
34	26	4	51	9	60	S342690	80	51	10	53	22	S342645	100
38	32	3	59	8	67	S383290	60	57	12	61	25	S383245	100
	30	4	59	8	67	S383090	60	57	12	61	25	S383045	100
50	44	3	75	14	89	S504490	25	75	15	79	33	S504445	40

ERMETO



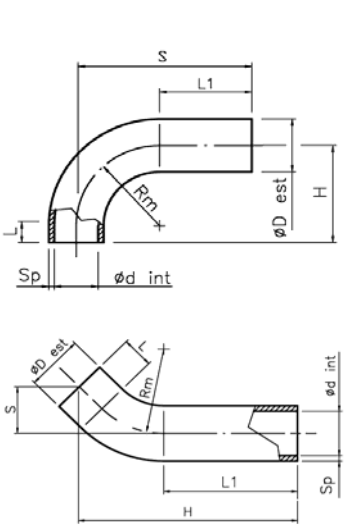

DIAMETER & THICKNESS			90° BENDS						45° BENDS						
D Ext	D Int	Sp	QUOTE R	QUOTE L	QUOTE L1	QUOTE H	QUOTE S	Part no.	Pcs per box*	QUOTE R	QUOTE L	QUOTE L1	QUOTE H	QUOTE S	Part no.	Pcs per box*
6	4	1	9	8	25	17	34	E060490	1.000	11	5	25	36	7	E060445	1.000
8	5	1,5	13	5	28	18	41	E080590	1.000	12	9	27	42	10	E080545	1.000
10	7	1,5	13	5	29	18	42	E100790	500	13	6	29	42	8	E100745	500
12	9	1,5	18	6	26	24	44	E120990	500	18	6	34	51	10	E120945	500
14	10	2	21	7	25	28	46	E141090	500	21	7	29	49	11	E141045	700
15	11	2	23	8	29	31	52	E151190	500	23	8	31	53	12	E151145	650
16	12	2	25	8	31	33	56	E161290	400	25	8	28	51	13	E161245	500
17	13	2	25	8	31	33	56	E171390	400	25	8	31	54	13	E171345	500
18	15	1,5	25	8	31	33	56	E181590	400	25	8	31	54	13	E181545	500
	14	2	25	8	31	33	56	E181490	400	25	8	31	54	13	E181445	500
	12	3	25	8	31	33	56	E181290	400	25	8	31	54	13	E181245	500
20	16	2	30	8	35	38	65	E201690	300	30	8	35	62	14	E201645	300
	15	2,5	30	8	35	38	65	E201590	300	30	8	35	62	14	E201545	300
22	18	2	33	8	38	41	71	E221890	200	33	8	35	64	15	E221845	250
	17	2,5	33	8	38	41	71	E221790	200	33	8	35	64	15	E221745	250
25	20	2,5	38	8	37	46	75	E252090	130	38	8	42	75	17	E252045	150
26	20	3	39	8	38	47	77	E262090	100	39	8	37	70	17	E262045	150
28	24	2	40	8	49	48	89	E282490	100	40	8	52	86	17	E282445	150
30	25	2,5	45	8	44	53	89	E302590	90	45	13	43	84	22	E302545	120
	22	4	45	8	44	53	89	E302290	90	45	13	43	84	22	E302245	120
32	26	3	42	8	47	50	89	E322690	70	42	12	44	82	21	E322645	120
34	26	4	51	9	42	60	93	E342690	50	51	12	44	89	23	E342645	80
35	30	2,5	53	10	45	63	98	E353090	50	53	12	44	90	24	E353045	80
38	32	3	59	8	43	67	102	E383290	50	59	12	47	97	26	E383245	70
	30	4	59	8	43	67	102	E383090	40	59	12	47	97	26	E383045	60
42	36	3	80	12	45	92	125	E423690	25	80	12	45	110	32	E423645	40
50	44	3	75	14	50	89	125	E504490	15	75	14	50	113	32	E504445	25

EUROTUBI

Via Croce Rossa Italiana, 12
20834 Nova Milanese (MB) Italy
Tel. 0362 365068 Fax 0362 41099
www.eurotubieuropa.it - info@eurotubieuropa.it

SPECIAL BENDS

Butt welding hydraulic bends. Material: seamless steel tube E235 according to UNI EN 10305-4

CATALOGUE 2018

SYMMETRICAL



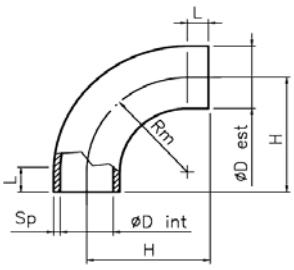

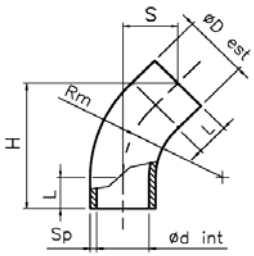

DIAMETER & THICKNESS			90° BENDS				45° BENDS				
D Ext	D Int	Sp	QUOTE R	QUOTE L	QUOTE H	Part no.	QUOTE R	QUOTE L	QUOTE H	QUOTE S	Part no.
6	3	1,5	10	5	15	SP060390	10	5	16	6	SP060345
8	5	1,5	13	7	20	SP080590	12	8	22	9	SP080545
10	7	1,5	15	8	23	SP100790	15	8	24	10	SP100745
	6	2	15	8	23	SP100690	15	8	24	10	SP100645
12	9	1,5	18	8	26	SP120990	18	8	26	11	SP120945
	8	2	18	8	26	SP120890	18	8	26	11	SP120845
14	10	2	21	8	29	SP141090	21	8	28	12	SP141045
15	12	1,5	23	8	31	SP151290	23	8	30	12	SP151245
	11	2	23	8	31	SP151190	23	8	30	12	SP151145
18	15	1,5	25	8	33	SP181590	25	8	31	13	SP181545
	14	2	25	8	33	SP181490	25	8	31	13	SP181445
	13	2,5	25	8	33	SP181390	25	8	31	13	SP181345
	12	3	25	8	33	SP181290	25	8	31	13	SP181245
22	18	2	30	8	38	SP221890	33	8	37	15	SP221845
	17	2,5	30	8	38	SP221790	33	8	37	15	SP221745
	16	3	30	8	38	SP221690	33	8	37	15	SP221645
	14	4	30	8	38	SP221490	33	8	37	15	SP221445
25	21	2	38	9	47	SP252190	38	10	44	18	SP252145
	19	3	38	9	47	SP251990	38	10	44	18	SP251945
28	24	2	40	10	50	SP282490	40	10	45	19	SP282445
	23	2,5	40	10	50	SP282390	40	10	45	19	SP282345
	22	3	40	10	50	SP282290	40	10	45	19	SP282245
	20	4	40	10	50	SP282090	40	10	45	19	SP282045
30	26	2	45	10	55	SP302690	45	10	49	20	SP302645
	25	2,5	45	10	55	SP302590	45	10	49	20	SP302545
	24	3	45	10	55	SP302490	45	10	49	20	SP302445
	22	4	45	10	55	SP302290	45	10	49	20	SP302245
35	31	2	53	12	65	SP353190	53	12	58	24	SP353145
	30	2,5	53	12	65	SP353090	53	12	58	24	SP353045
	29	3	53	12	65	SP352990	53	12	58	24	SP352945
	27	4	53	12	65	SP352790	53	12	58	24	SP352745
40	32	4	60	20	80	SP403290	60	20	77	32	SP403245

ERMETO



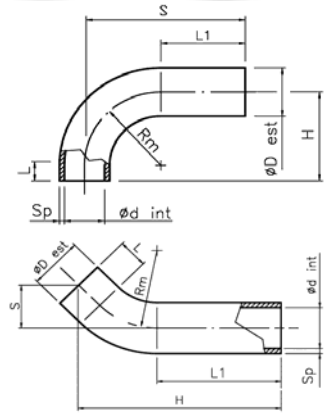

DIAMETER & THICKNESS			90° BENDS					45° BENDS					
D Ext	D Int	Sp	QUOTE R	QUOTE L	QUOTE L1	QUOTE H	QUOTE S	Part no.	QUOTE R	QUOTE L	QUOTE L1	QUOTE H	QUOTE S	Part no.
6	3	1,5	11	5	25	16	36	EP060390	11	5	25	36	7	EP060345
8	4	2	13	5	28	18	41	EP080490	12	9	27	42	10	EP080445
12	8	2	18	6	26	24	44	EP120890	18	6	26	43	10	EP120845
18	13	2,5	25	8	31	33	56	EP181390	25	8	31	54	13	EP181345
22	18	3	33	8	38	41	71	EP221890	33	8	38	67	15	EP221845
25	21	2	38	8	37	46	75	EP252190	38	8	37	70	17	EP252145
28	23	2,5	40	8	49	48	89	EP282390	40	8	49	83	17	EP282345
	22	3	40	8	49	48	89	EP282290	40	8	49	83	17	EP282245
	20	4	40	8	49	48	89	EP282090	40	8	49	83	17	EP282045
30	24	3	45	8	44	53	89	EP302490	45	8	44	81	19	EP302445
35	31	2	53	8	44	61	97	EP353190	53	8	44	87	21	EP353145
	29	3	53	10	45	63	98	EP352990	53	10	45	90	23	EP352945
	27	4	53	10	45	63	98	EP352790	53	10	45	90	23	EP352745
40	32	4	60	20	50	80	110	EP403290	60	20	50	107	32	EP403245